SAMSUNG CONFIDENTIAL
THIS DOCUMENT CONTAINS CONFIDENTIAL
PROPRIETARY INFORMATION THAT IS
SAMSUNG ELECTRONICS CO'S PROPERTY.
DO NOT DISCLOSE TO OR DUPLICATE FOR OTHERS
EXCEPT AS AUTHORIZED BY SAMSUNG.

TabA 10.1 Note REV0.2

2016.07.04

	REFERENCE
Sheet1 : RF	1000
Sheet2 : CONNECTiViTY	2000
Sheet3 : AP JOSHUA	3000
Sheet4 : POWER	4000
Sheet5 : AUDIO	5000
Sheet6 : DISPLAY	6000
Sheet7 : SENSOR/CAMERA	7000
Sheet8 : Wacom	8000
Sheet9 : Sub PCB & HOME KEY PCB	9000

Samsung Confidential

Engineer	SAMSUNG	JJang	
Drawn By	LIM,II		
R&D CHK		TITLE: TabA 10.1 Note	Size A2
DOC CTRL CHK			
MFG ENGR CHK			
QA CHK		REV / Drawing Number	Sheet 0 of 6

Changed by: user43 | Date Changed: 2012. 06. 27

SAMSUNG CONFIDENTIAL
THIS DOCUMENT CONTAINS CONFIDENTIAL
PROPRIETARY INFORMATION THAT IS
SAMSUNG ELECTRONICS CO.'S PROPERTY.
DO NOT DISCLOSE THIS DOCUMENT OR ANY PART
EXCEPT AS AUTHORIZED BY SAMSUNG.

1. RF Part

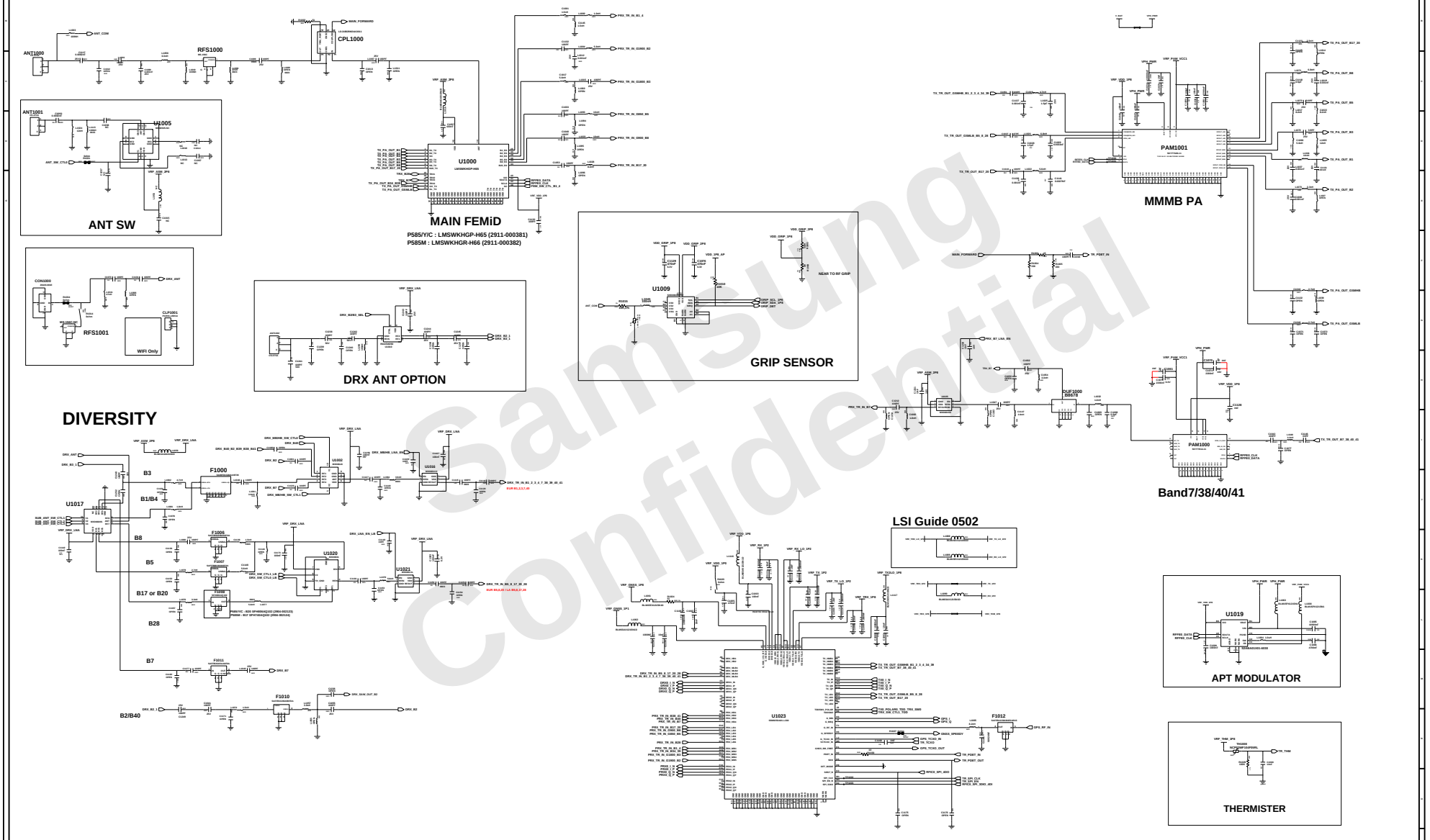

RFIC (925 EVT1.1)

TRCV

Samsung Confidential

cad|ecad45|10.244.89.103|20160726-140634

SAMSUNG CONFIDENTIAL
THIS DOCUMENT CONTAINS CONFIDENTIAL AND PROPRIETARY INFORMATION OF SAMSUNG ELECTRONICS CO'S PROPERTY. DO NOT DISCLOSE TO OR DUPLICATE FOR OTHERS EXCEPT AS AUTHORIZED BY SAMSUNG.

2. CONNECTIVITY Part

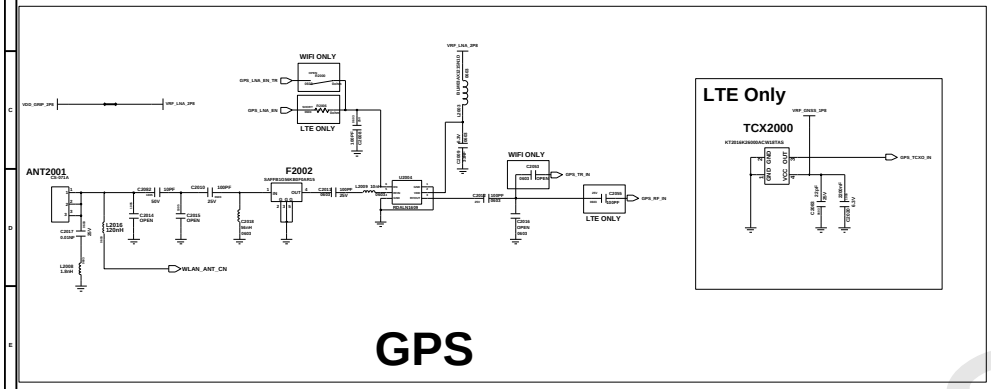

GPS

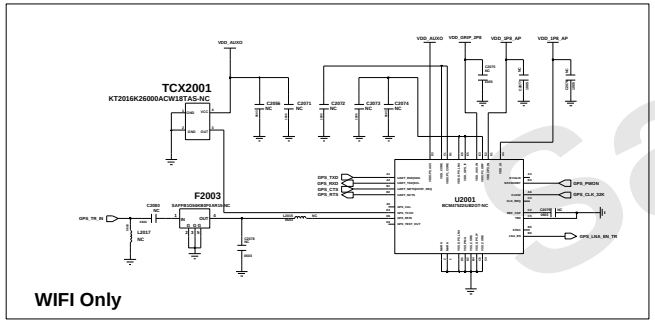

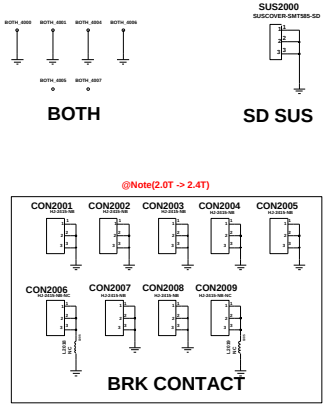

BOTH

SD SUS

BRK CONTACT

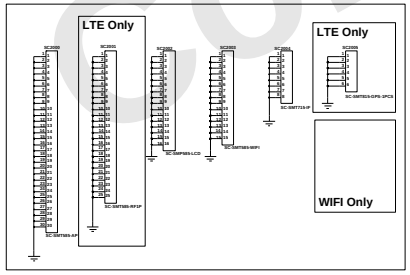

SMD Shieldcan

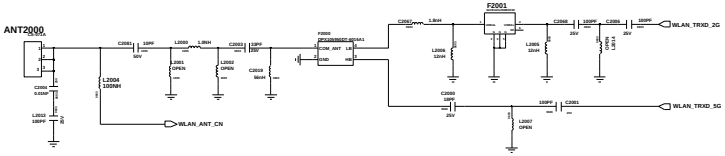

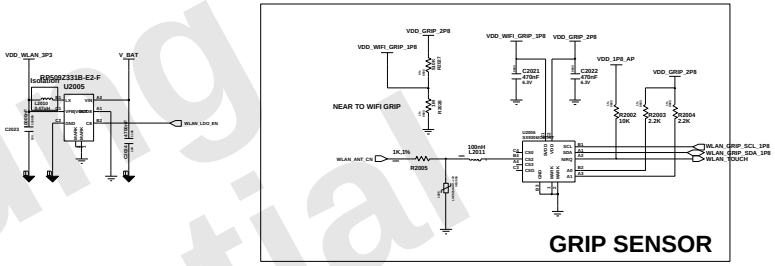

GRIP SENSOR

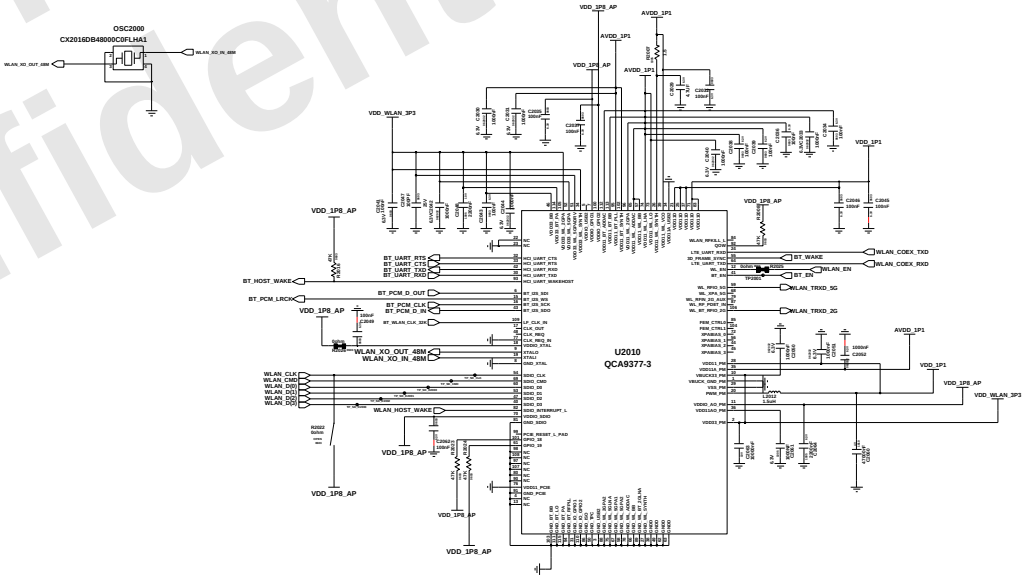

BT/WiFi

Samsung Confidential

SAMSUNG CONFIDENTIAL
THIS DOCUMENT CONTAINS CONFIDENTIAL
PROPRIETARY INFORMATION THAT IS
SAMSUNG ELECTRONICS CO'S PROPERTY.
DO NOT DISCLOSE THIS DOCUMENT OR ITS CONTENTS
EXCEPT AS AUTHORIZED BY SAMSUNG.

3. AP Part(JOSHUA LITE)

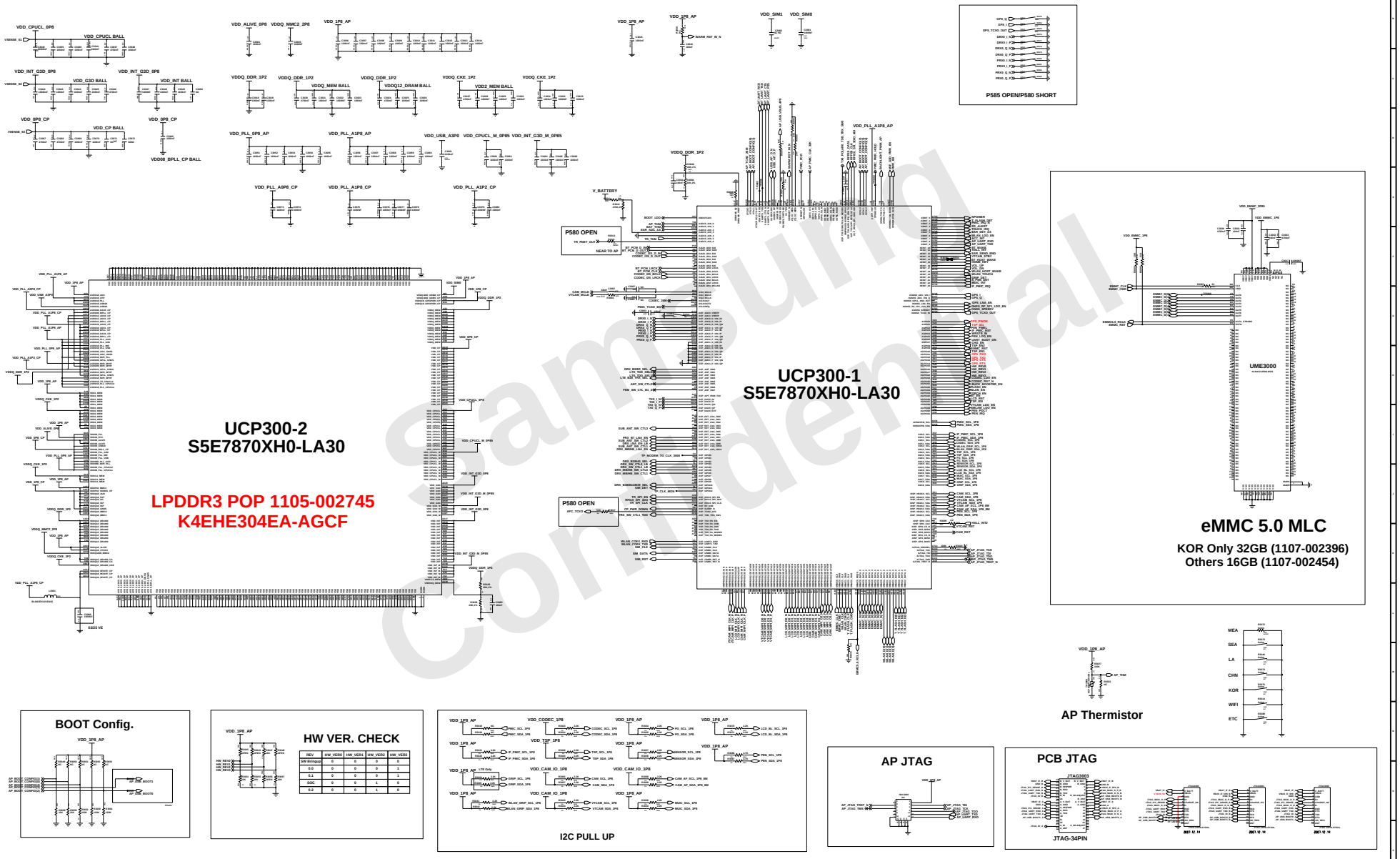

Samsung Confidential

cad|ecad45|10.244.89.103|20160726-140638

SAMSUNG CONFIDENTIAL
THIS DOCUMENT CONTAINS CONFIDENTIAL
PROPRIETARY INFORMATION THAT IS
SAMSUNG ELECTRONICS CO'S PROPERTY.
DO NOT COPY OR DISCLOSE THIS DOCUMENT OR
DISCLOSE ITS AUTHORIZED BY SAMSUNG.

4. POWER Part

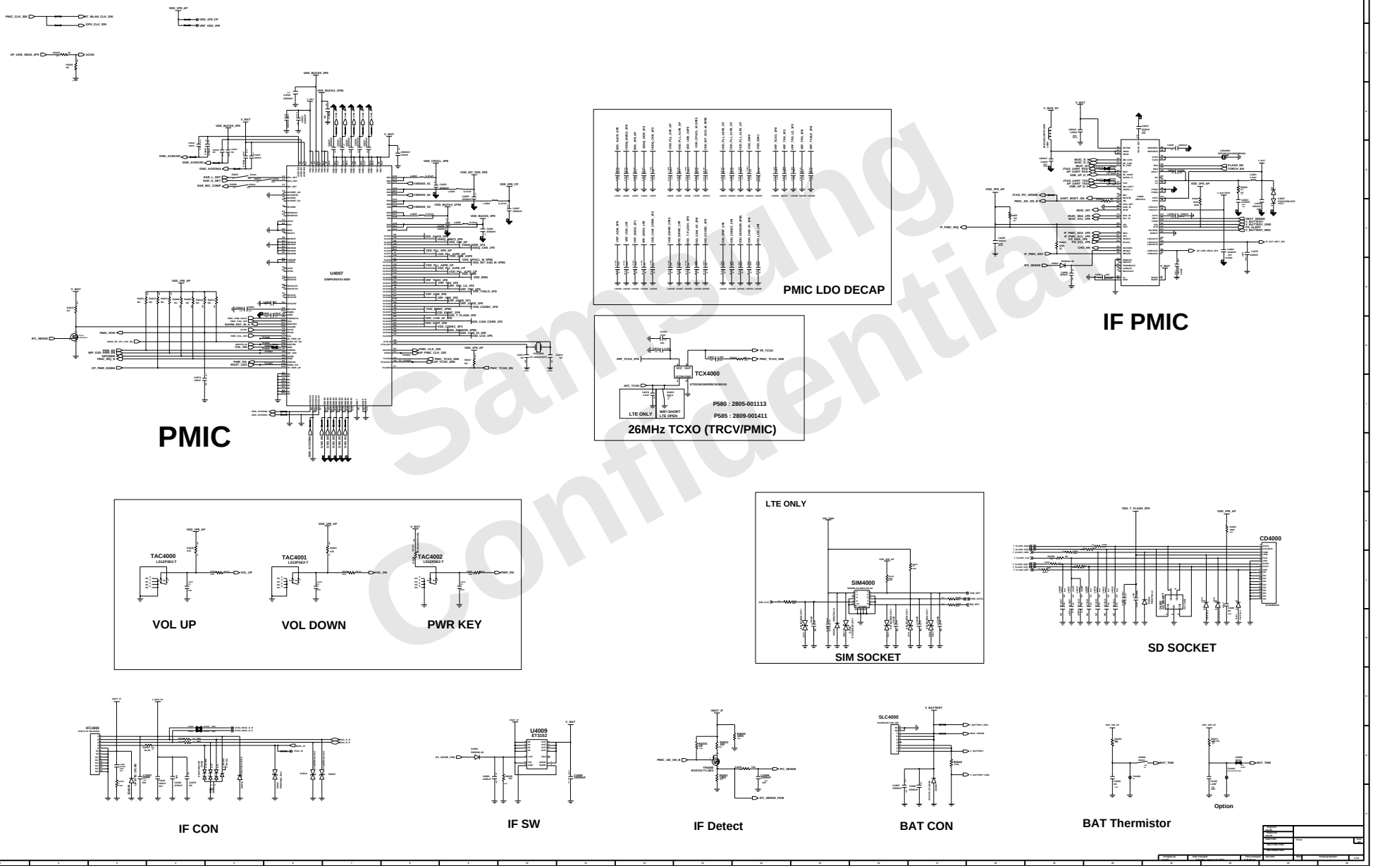

Samsung Confidential

cad|ecad45|10.244.89.103|20160726-140639

SAMSUNG CONFIDENTIAL
THIS DOCUMENT CONTAINS CONFIDENTIAL PROPRIETARY INFORMATION THAT IS SAMSUNG ELECTRONICS CO'S PROPERTY. DO NOT DISCLOSE TO OR DUPLICATE FOR OTHERS EXCEPT AS AUTHORIZED BY SAMSUNG.

5. AUDIO Part

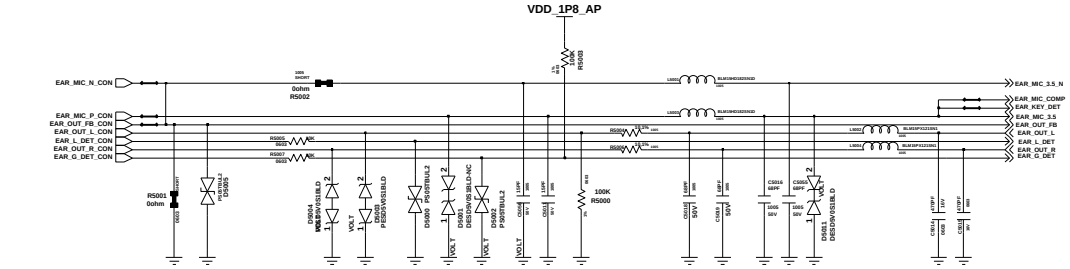

3.5 PI CON

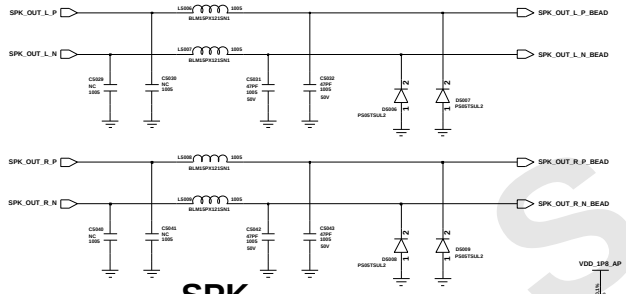

SPK

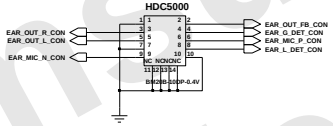

EAR CON

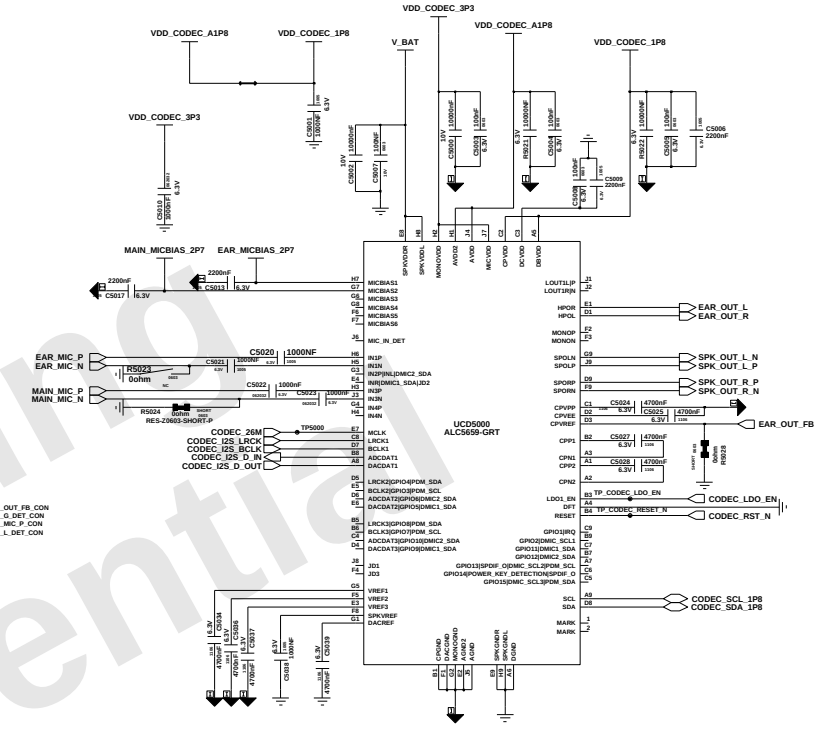

Audio CODEC

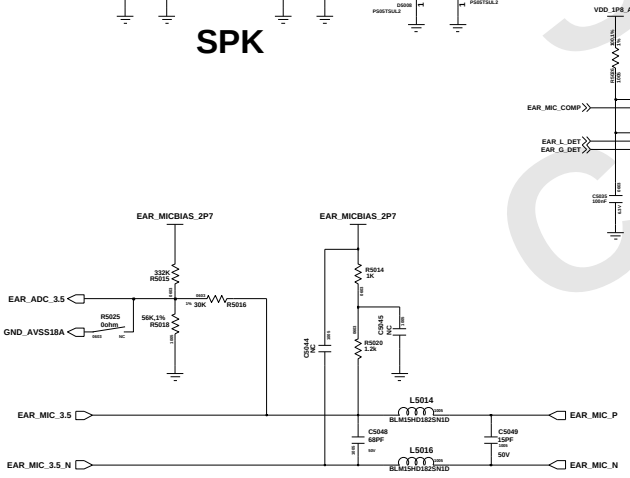

EAR DETECT

EAR MIC

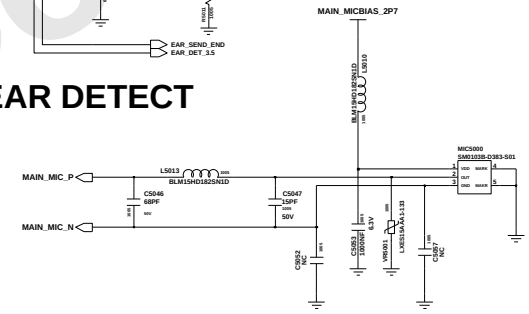

MAIN MIC

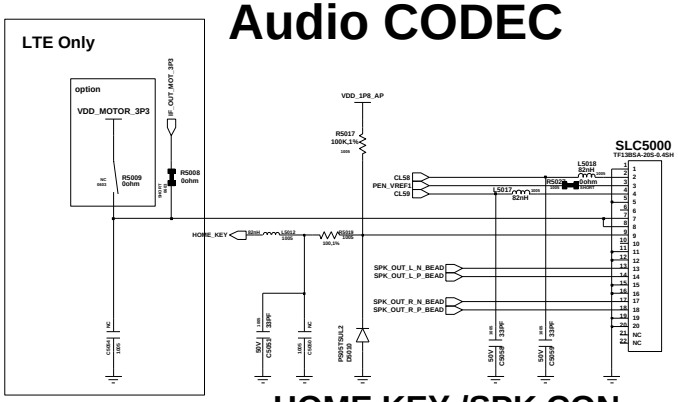

HOME KEY /SPK CON

Samsung Confidential

Engineer					
Drawn by					
R&D CHK	TITLE				Size A4
DOC CTRL CHK					
MFG ENGR CHK					
Changed by	Date Changed	Time Changed	QA CHK	REV	Drawing Number	Sheet 5 of 7

SAMSUNG CONFIDENTIAL
THIS DOCUMENT CONTAINS CONFIDENTIAL PROPRIETARY INFORMATION THAT IS SAMSUNG ELECTRONICS CO'S PROPERTY. DO NOT DISCLOSE TO OR DUPLICATE FOR OTHERS EXCEPT AS AUTHORIZED BY SAMSUNG.

6. DISPLAY Part

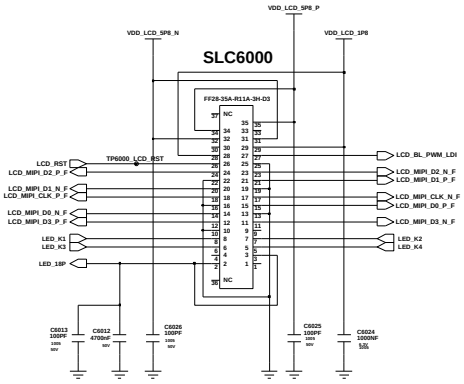

LCD CON

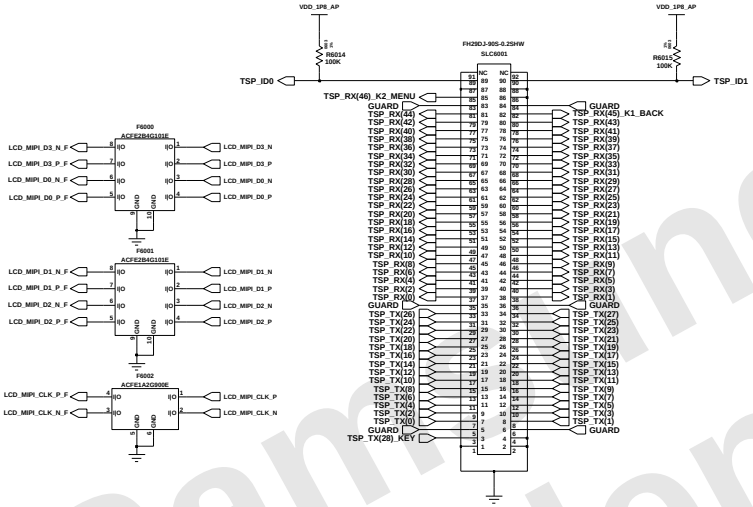

TSP CON

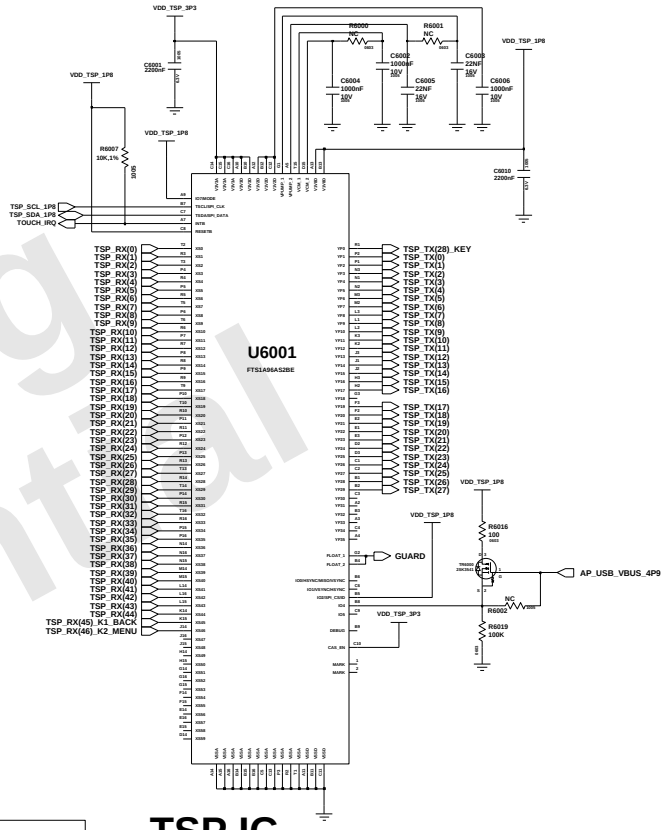

TSP IC

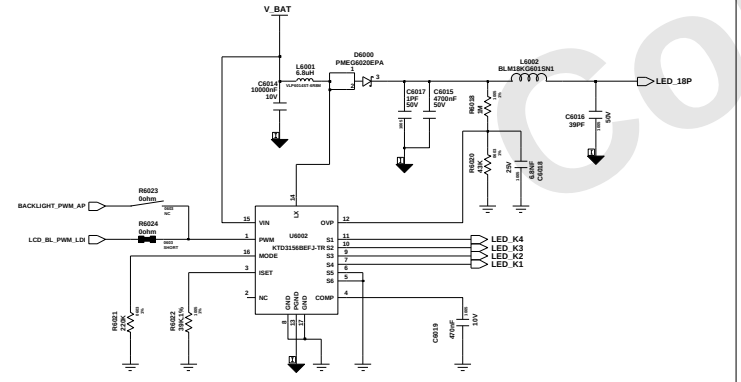

LCD BACKLIGHT DRIVER IC

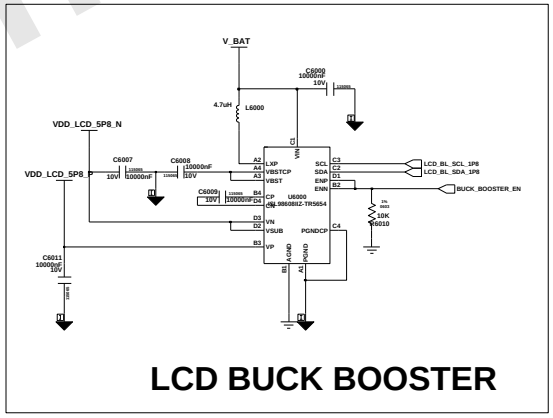

LCD BUCK BOOSTER

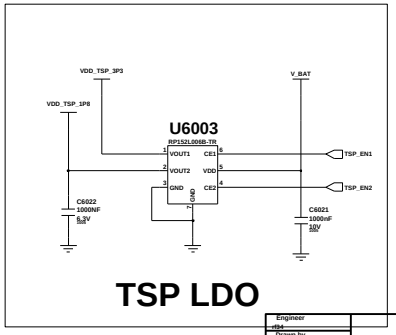

TSP LDO

Changed by	Date Changed	Time Changed	QA CHK	REV 0.0	Drawing Number	Sheet 6 of 6

Engineer rl34
Drawn by rl34
R&D CHK
DOC CTRL CHK
MFG ENGR CHK
TITLE
Size A2

Samsung Confidential

SAMSUNG CONFIDENTIAL
THIS DOCUMENT CONTAINS CONFIDENTIAL PROPRIETARY INFORMATION THAT IS SAMSUNG ELECTRONICS CO'S PROPERTY. DO NOT DISCLOSE TO OR DUPLICATE FOR OTHERS EXCEPT AS AUTHORIZED BY SAMSUNG.

7. SENSOR / CAMERA Part

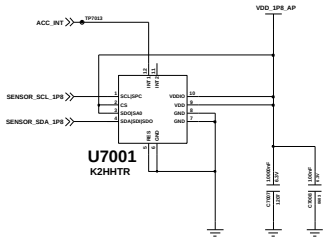

ACC

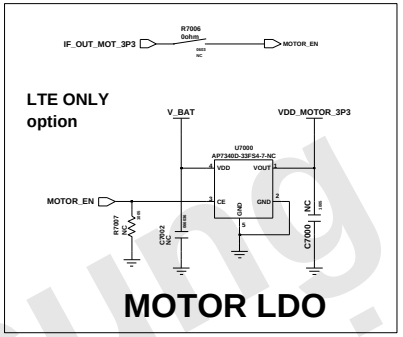

MOTOR LDO

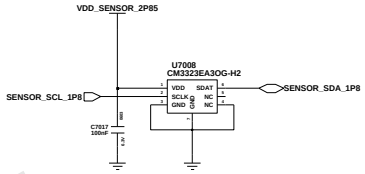

RGB Sensor

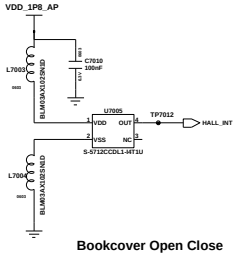

Bookcover Open Close

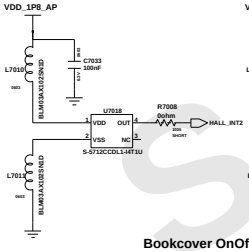

Bookcover OnOff

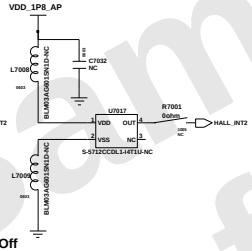

Hall Sensor SEIKO

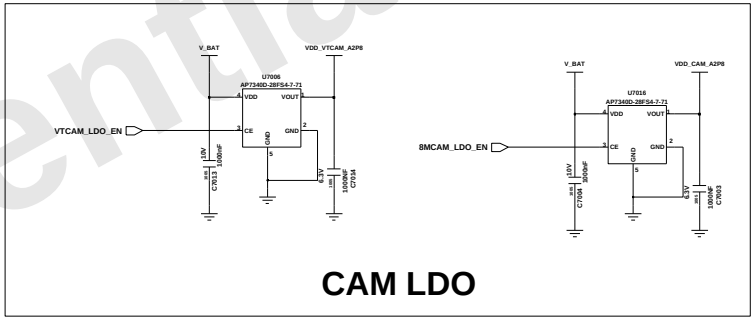

CAM LDO

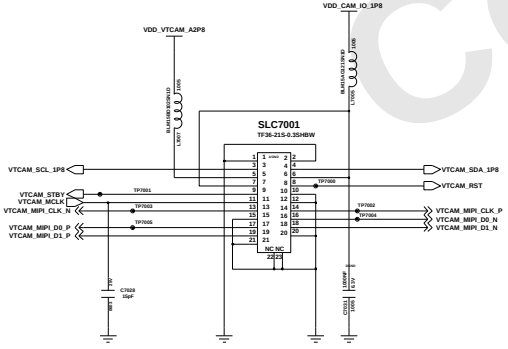

2M Front CAM

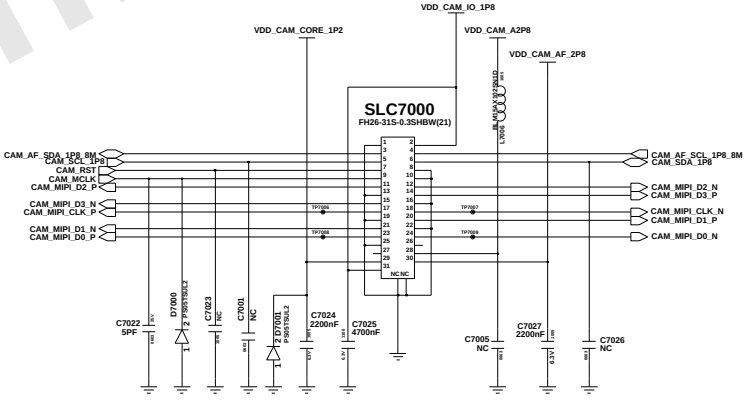

8M Rear CAM

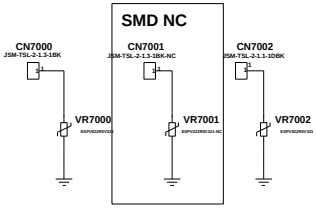

Changed by	Date Changed	Time Changed	QA CHK	REV 0.0	Drawing Number	Sheet 6 of 6	

Engineer: rl34
Drawn by: rl34
R&D CHK
DOC CTRL CHK
MFG ENGR CHK
TITLE
Size A2

Samsung Confidential

SAMSUNG CONFIDENTIAL
THIS DOCUMENT CONTAINS CONFIDENTIAL PROPRIETARY INFORMATION THAT IS SAMSUNG ELECTRONICS CO'S PROPERTY. DO NOT DISCLOSE TO OR DUPLICATE FOR OTHERS EXCEPT AS AUTHORIZED BY SAMSUNG.

8. WACOM(S-PEN)_PART

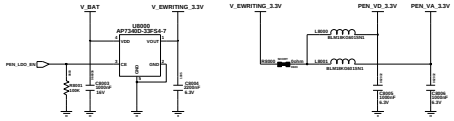

S-PEN LDO

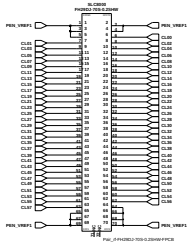

70pin S-PEN Connector

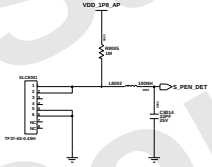

S-PEN Detect

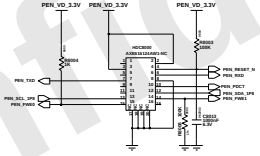

DEBUGER

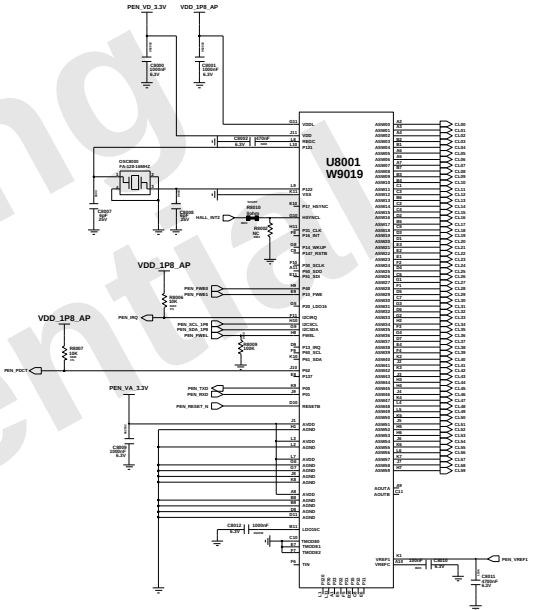

S_PEN Control IC

Samsung Confidential

Designed by: sser | Drawn by: sser | Date Changed: Tuesday, January 26, 2016 | Time Changed: 5:55:57 pm | Drawing Number: | Page: 9

cad|ecad45|10.244.89.103|20160726-140644

SAMSUNG CONFIDENTIAL
THIS DOCUMENT CONTAINS CONFIDENTIAL PROPRIETARY INFORMATION THAT IS SAMSUNG ELECTRONICS CO'S PROPERTY. DO NOT DISCLOSE TO OR DUPLICATE FOR OTHERS EXCEPT AS AUTHORIZED BY SAMSUNG.

9. SUB PCB & HOME KEY PCB PART

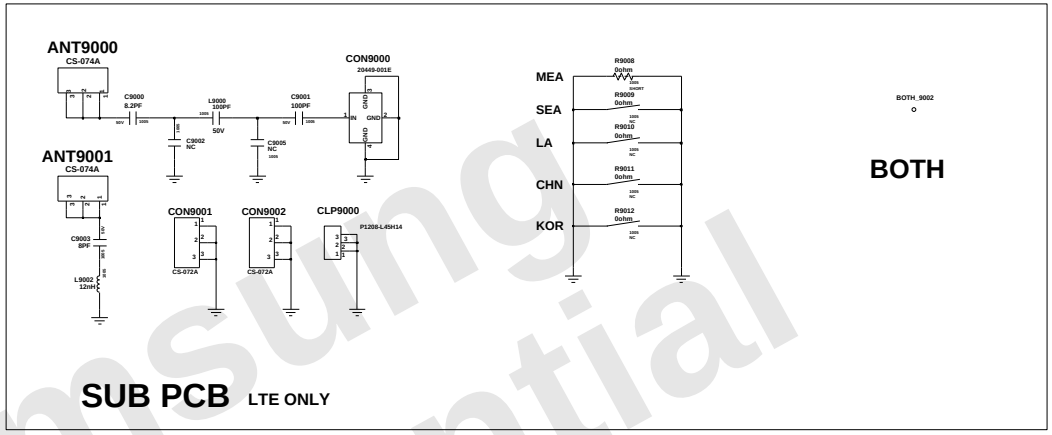

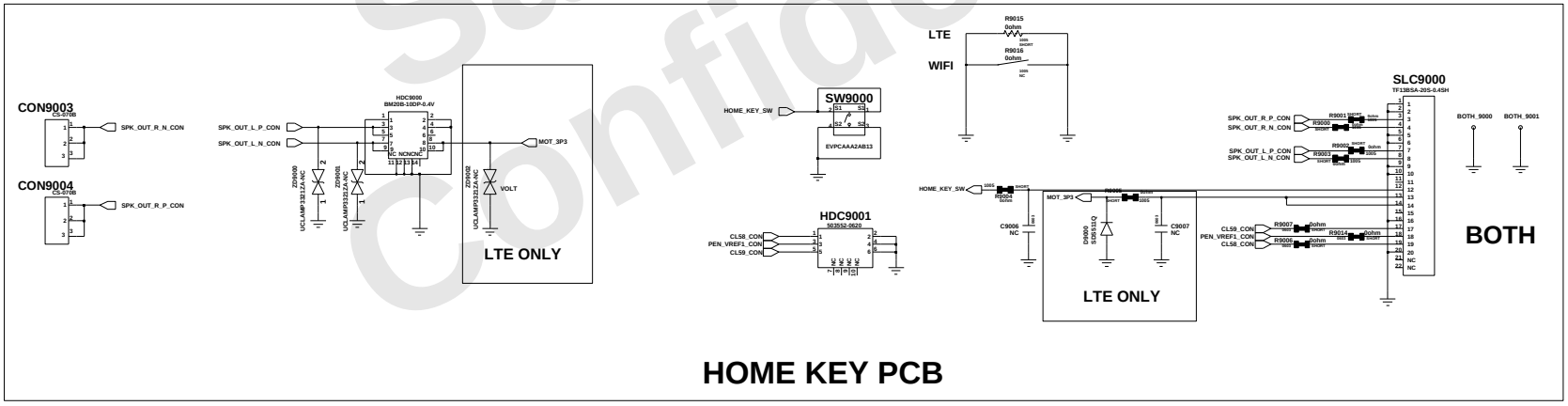

Samsung Confidential

Engineer	
Drawn by	
R&D CHK	TITLE
DOC CTRL CHK	Size A2
MFG ENGR CHK	

Changed by	Date Changed	Time Changed	QA CHK	REV 0.0	Drawing Number	Sheet 6 of 6

Model :
Revision :
Manufacture Count :
Charge :
Contact :
Date :
Routing :
Resin :

VX_Setup(2016-01-20)_HHP

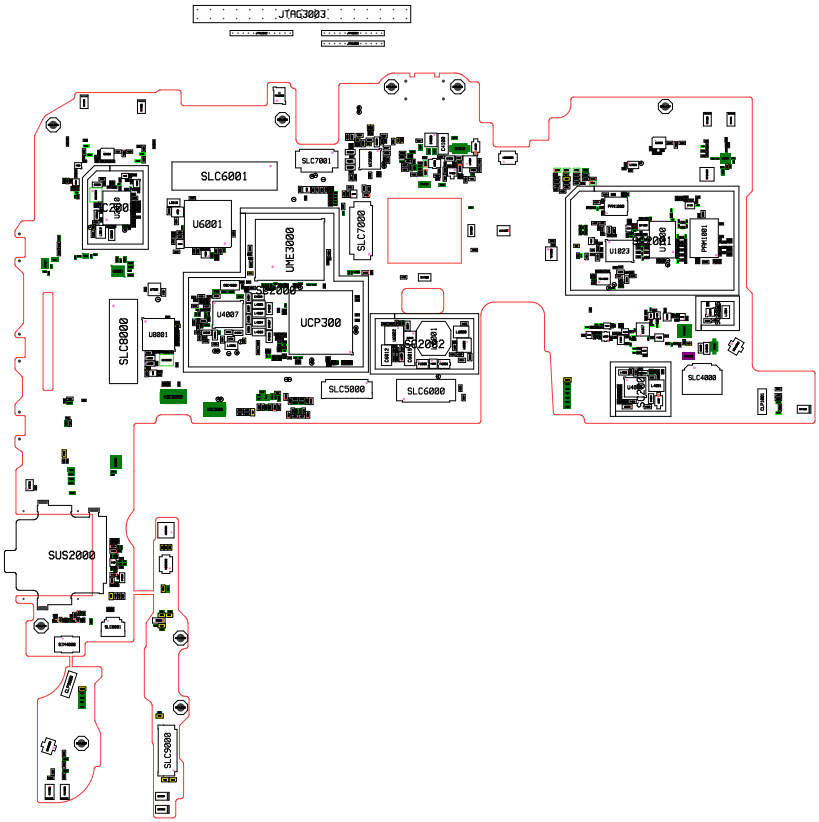

	○			

	○			

	◎			

	○			

	◎			

	⊕			
	⊕			
	□			
	⊠			
	⊞			
	+			
	×			
	⋇			
	◇			
	◈			

2007-010856(R4042) : Check! Bottom Surface of Component

Model :
Revision :
Manufacture Count :
Charge :
Contact :
Date :
Routing :
Resin :

VX_Setup(2016-01-20)_HHP

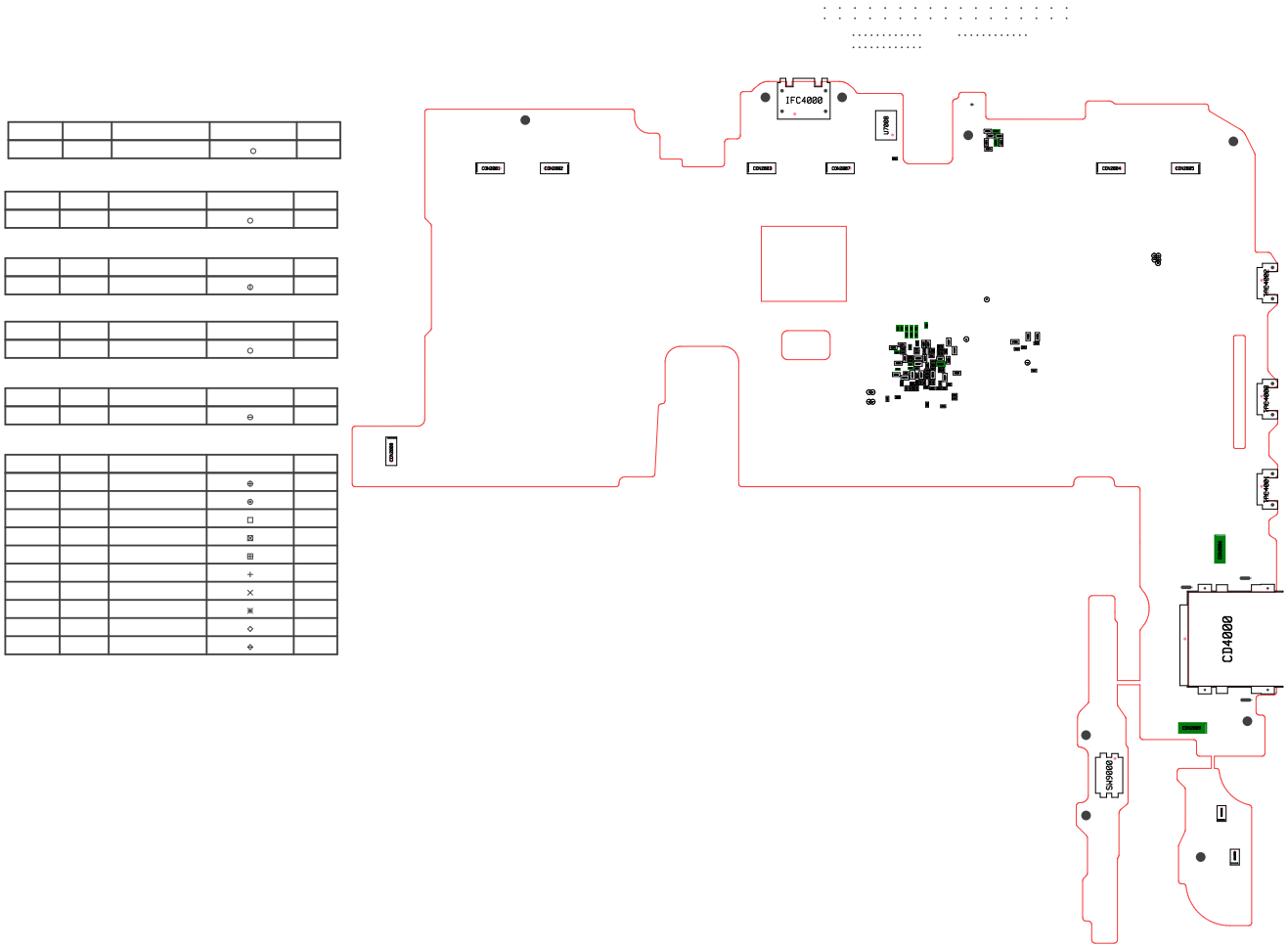

2007-010856(R4042) : Check! Bottom Surface of Component